COIN-D6 Instruction Manual

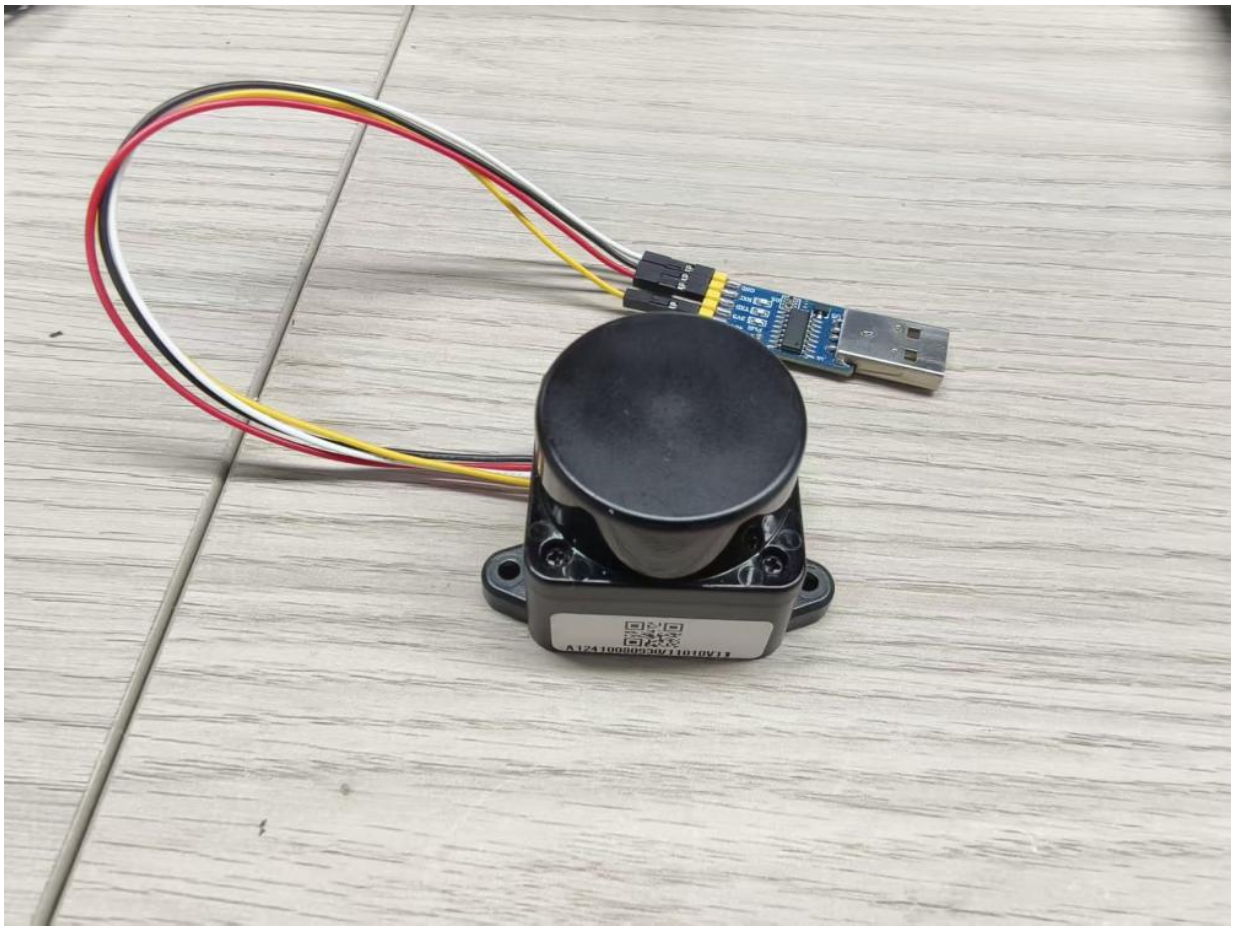

Product Specification Sheet:

Model: COIN-D6 (Guoke Optoelectronics)

Description: LiDAR

Contents

1. Product Overview 3

2. Parameter Indicators 4

2.1 Performance Parameters 4

2.2 Mechanical Parameters 5

2.3 Optical Window 6

2.4 Installation and External Dimensions 7

2.5 Definition of Scan Data Coordinate System 7

3. Hardware Connection 8

4. Instructions for Use 9

4.1 Windows System 9

4.1.1 Installing the driver 9

4.1.2 PC Software Usage 10

4.1.3. Serial Port Start Radar 12

4.2 ROS2 12

1. Product Overview

The COIN-D6 is a new generation coaxial 360° scanning ranging lidar developed by Guoke Optoelectronics. The product is based on direct flight...

the time-to-time (dToF) ranging principle, with its internal rotating components employing wireless power supply and optoelectronic communication technology. Combined with optical, electrical , and algorithmic design, it achieves high-frequency, high-precision distance measurement with a maximum measurement radius of 12 meters. This product is suitable for practical applications such as map surveying, intelligent device navigation and obstacle avoidance, and environmental modeling.

Product Features:

Maximum measurement range: 0.05m~12m.

The direct time-of-flight (dToF) ranging principle is adopted.

Scanning range 360°, angular resolution 0.9°.

Coaxial design, compact size, can be built-in installation.

It uses a brushless motor with a long service life of over 10,000 hours.

Product information package:
https://drive.google.com/drive/folders/1_XfZTemyIBoZssQmFW5Jx17jxx3hn337?usp=drive_link

2. Parameter Indicators

2.1 Performance Parameters

project	Minimum value	Typical value	Maximum value	unit	Remark
laser wavelength	890	905	920	nm	-
Laser safety	-	Class1	-	-	(IEC-60825)
Measurement range	0.05	10	12	m	90% diffuse reflectance
Measurement range	0.05	8	10	m	10% diffuse reflectance
Accuracy ①	±10	-	-	mm	0.05-1m
Accuracy ①	±30	±40	-	mm	>1m
Field of view	-	-	360	°	-
Pitch angle	0	-	2	°	-
Angular resolution	-	0.9	-	°	-
Frequency	-	4000	-	Hz	-
Anti-ambient	-	-	60K	lx	Referencing

light					the Guoke Optoelectronic Core Testing Method
rotational speed	-	10	15	Hz	-
Rated power	-	1.2	1.6	W	-
Operating temperature	-10	25	50	℃	-
Storage temperature	-30	25	70	℃	-
Overall lifespan	-	10000	-	H	-

2.2 Mechanical Parameters

project	parameter
Waterproof rating	IPX4
weight	40g (excluding external wiring)
External dimensions (length * width * height)	52.7mm*45.2mm*34.4mm

2.3 Optical Window

To prevent dust from affecting radar ranging performance, please keep the product's optical window clean. To ensure normal radar operation, the external radar system design must avoid obstructing the radar's optical window. For special installation requirements or if the radar needs to be encased in a translucent material, please contact Guoke Optoelectronics technical personnel to discuss feasibility. Using the sensor base plane as a reference, the height of the COIN-D6 laser emission point from the base plane is 26.9mm.

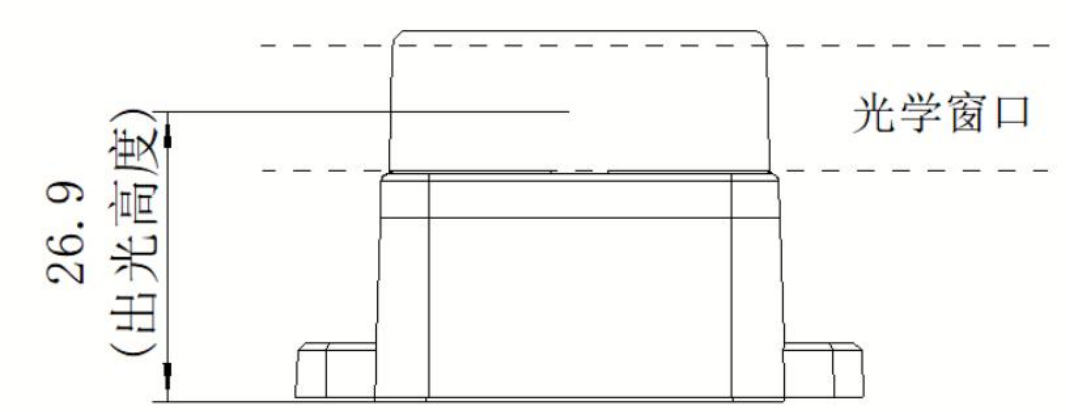

2.4 Installation and External Dimensions

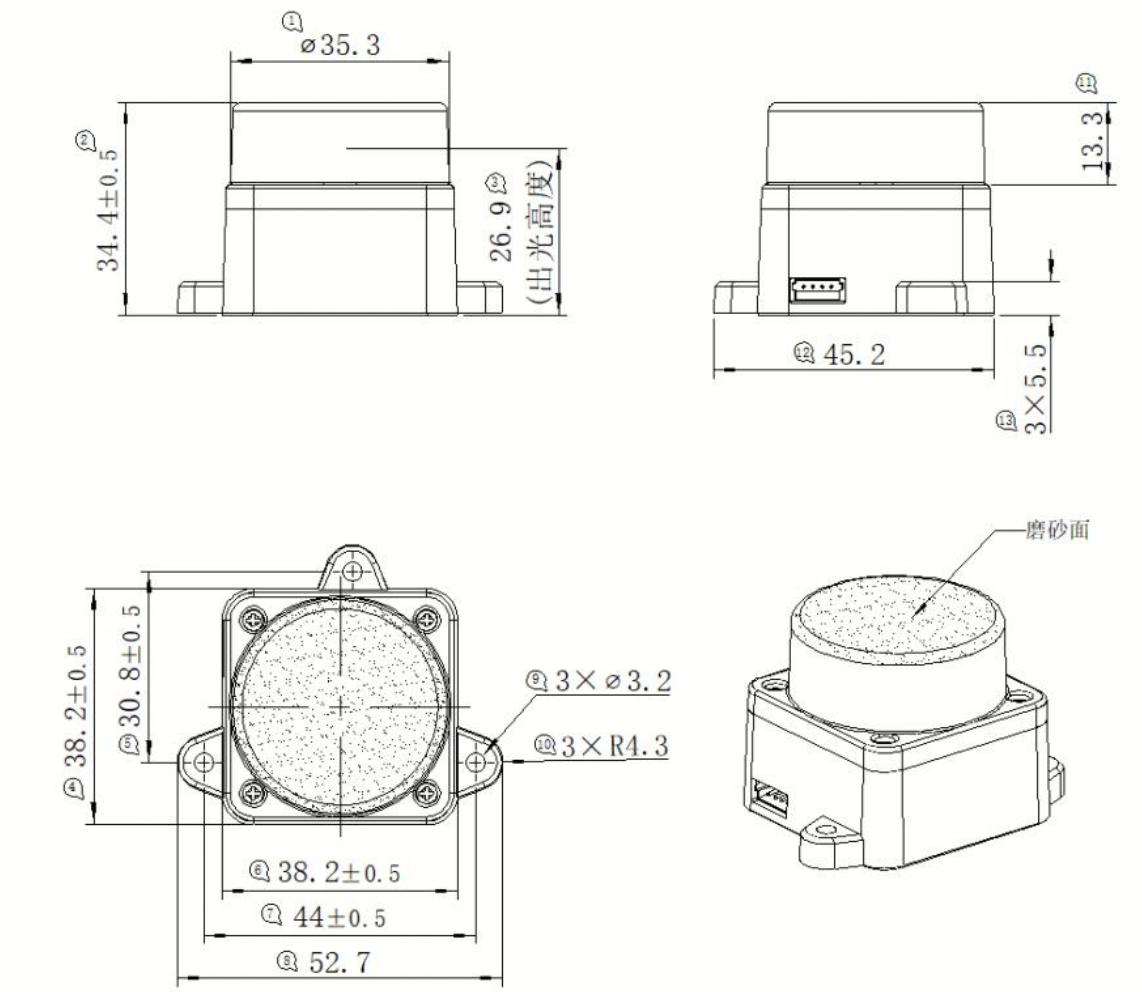

2.5 Definition of Scan Data Coordinate System

COIN-D6 uses a coordinate system that follows the left-hand rule. The origin of the coordinate system is the center of rotation of the distance measurement core, and the rotation angle increases with clockwise rotation. The coordinate system definition is shown in the figure below:

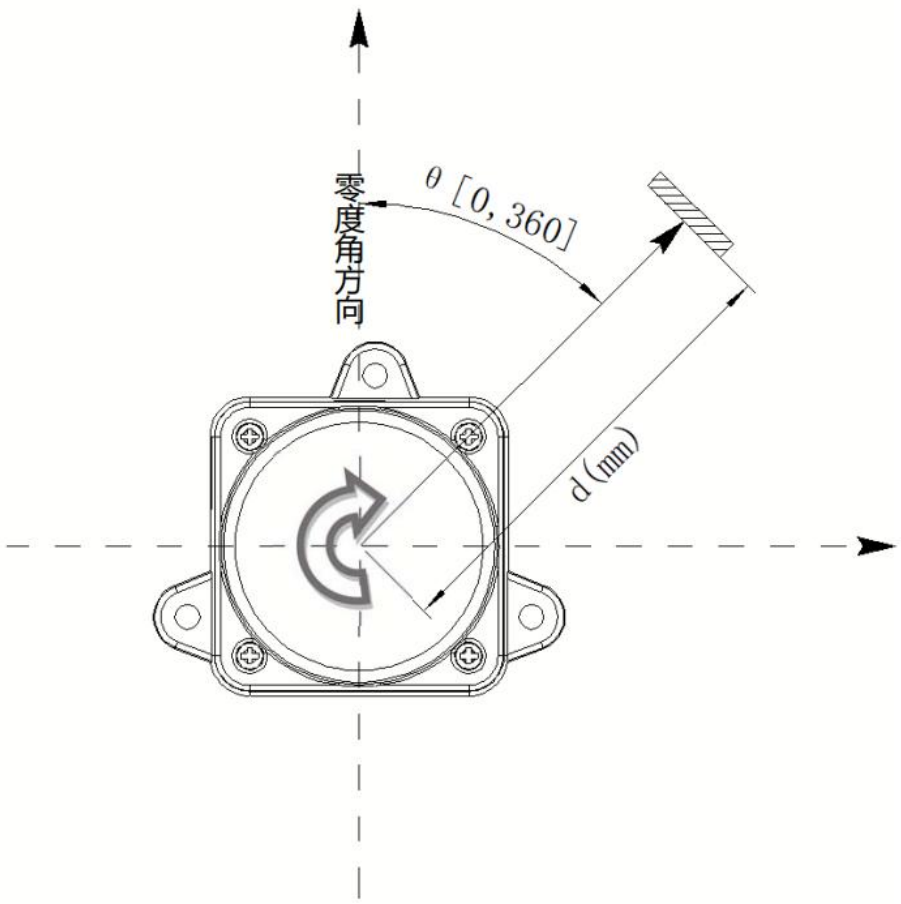

3. Hardware Connection

According to wire colors: yellow to 5V, white to GND, red to TXD, black to RXT.

4. Instructions for Use

4.1 Windows System

4.1.1 Installing the driver

CH340 Download Link:https://drive.google.com/drive/folders/15z3-9ImOwGho-p0NmA83ccnkjxUcmqtM?usp=drive_link

DRVSETUP64	2025/10/29 15:48	文件夹	
安装失败解决办法	2025/10/29 15:48	文件夹	
CH341PT.DLL	2005/7/30 0:00	应用程序扩展	7 KB
CH341S64.SYS	2011/11/5 0:00	系统文件	57 KB
CH341S98.SYS	2007/6/12 0:00	系统文件	20 KB
ch341SER.CAT	2011/11/25 7:22	安全目录	10 KB
CH341SER.INF	2011/11/4 0:00	安装信息	6 KB
CH341SER.SYS	2011/11/5 0:00	系统文件	39 KB
CH341SER.VXD	2008/12/18 0:00	虚拟设备驱动程序	20 KB
readme.txt	2017/12/26 21:48	文本文档	1 KB
SETUP.EXE	2012/2/15 0:00	应用程序	82 KB

Double-click the SETUP.EXT program to begin installing the driver.

Click "Install" to begin driver installation.

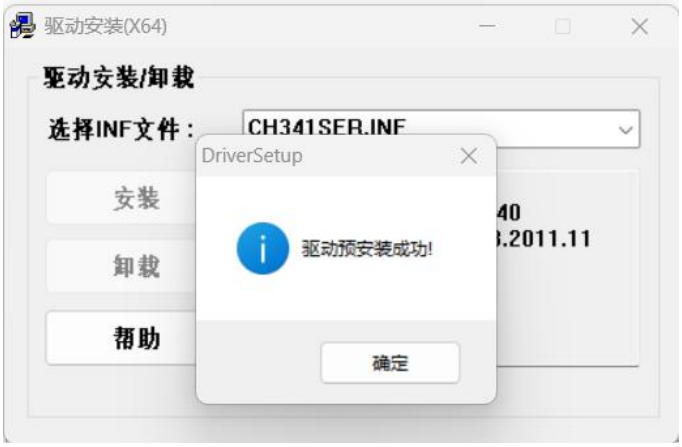

Install the USB serial port driver; if you already have one, you can skip this step. After installing the driver, plug the USB into your computer and it will display "USB-SERIAL".

CH340 (COMX) indicates that the driver installation was successful, as shown in the figure.

4.1.2 PC Software Usage

PC software download link:
https://drive.google.com/file/d/1SBqWE_DmlgveFHY05U8B0erPRvElEP9v/view?usp=drive_link

the PC software package provided by CSPC and run the PC software . Confirm that the serial port is as previously displayed.

After confirming the serial port connection is correct, click the OPEN button and then click the radar icon to open the PC software.

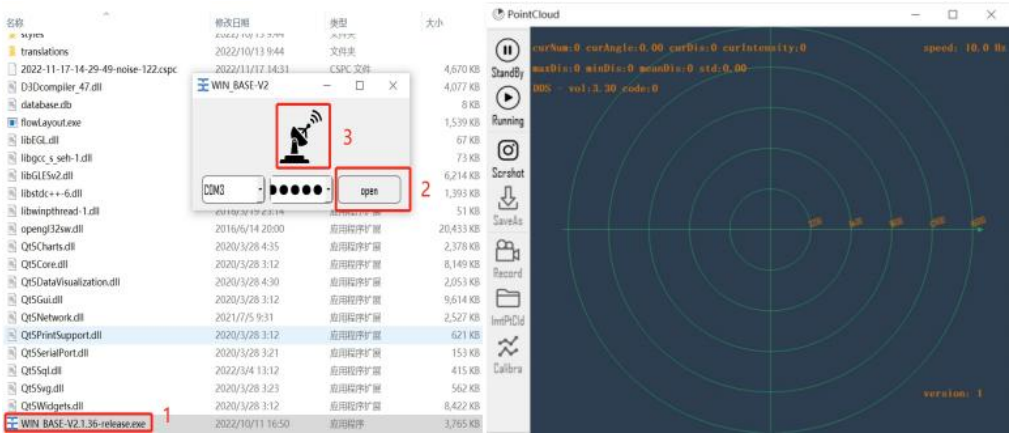

Click the Running button on the PC software , and the radar will start running and generate a point cloud map.

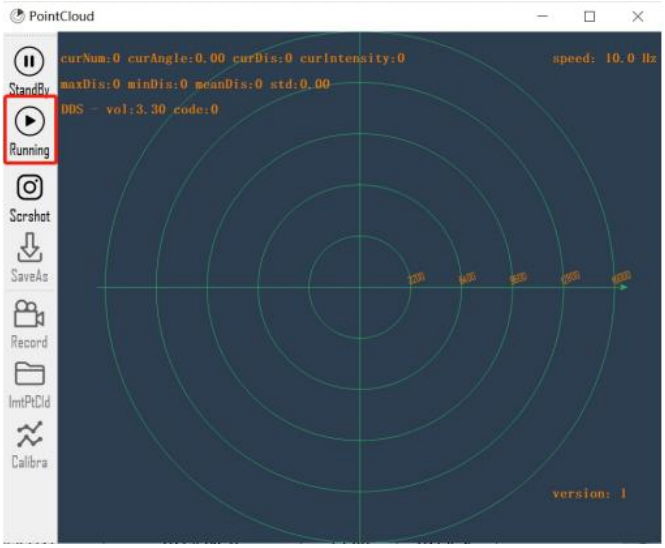

Clicking on a point cloud with the mouse will display information about the angle, distance, and intensity of the point cloud at that point. (See the image below.)

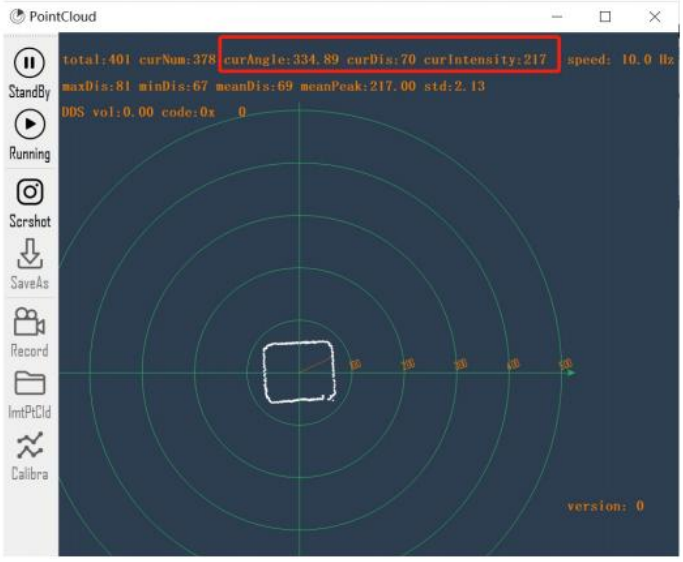

4.1.3. Serial Port Start Radar

Serial Port Assistant Download: https://drive.google.com/file/d/1ps2fXKrsGR0NaRgpN-Z9eFOhibTPjdsD/view?usp=drive_link

1. Open the Serial Port Assistant, select the 230400 baud rate and the corresponding port, and start the port:

Start Radar Command: **AA 55 F0 0F**

Close Radar Command: **AA 55 F5 0A**

4.2 ROS2

ROS2 program download link: https://drive.google.com/drive/folders/1yiiONkmzb4KWPYYFDwfQyIUfweCqo4F7?usp=drive_link

Import the SDK into the virtual machine with the ROS2 environment configured, and place it in ro2_ws/src;

Modify cspc_lidar_sdk_ros2/params/cspc_lidar.yaml and change the port to the actual serial port;

Check serial port permissions and grant them.

```
xtark@tarkbot-pc: ~$ ls -l /dev/ttyUSB0
crw-rw-rw- 1 root dialout 188, 0 Feb 19 15:12 /dev/ttyUSB0
xtark@tarkbot-pc: ~$ sudo chmod 777 /dev/ttyUSB0
```

To compile within the ros2_ws working environment, enter the command " colcon build " in the terminal.

After compilation, enter the command " source install/setup.bash " in the terminal to add environment variables.

Enter the command " ros2 launch cspc_lidar lidar_launch.py " in the terminal to turn on the LiDAR and receive data.

```
[cspc_lidar-1] full----- count=400,time=49770322,frequence=100
[cspc_lidar-1] full----- count=401,time=49771427,frequence=100
[cspc_lidar-1] full----- count=400,time=49772421,frequence=100
[cspc_lidar-1] full----- count=401,time=49773516,frequence=100
[cspc_lidar-1] full----- count=400,time=49774619,frequence=100
[cspc_lidar-1] full----- count=401,time=49775710,frequence=100
[cspc_lidar-1] full----- count=401,time=49776708,frequence=100
[cspc_lidar-1] full----- count=401,time=49777806,frequence=100
[cspc_lidar-1] full----- count=401,time=49778812,frequence=100
[cspc_lidar-1] full----- count=400,time=49779903,frequence=100
[cspc_lidar-1] full----- count=400,time=49781001,frequence=100
[cspc_lidar-1] full----- count=400,time=49782097,frequence=100
[cspc_lidar-1] full----- count=400,time=49783194,frequence=100
[cspc_lidar-1] full----- count=400,time=49784289,frequence=100
[cspc_lidar-1] full----- count=400,time=49785387,frequence=100
[cspc_lidar-1] full----- count=401,time=49786481,frequence=100
[cspc_lidar-1] full----- count=400,time=49787482,frequence=100
[cspc_lidar-1] full----- count=401,time=49788581,frequence=100
[cspc_lidar-1] full----- count=401,time=49789679,frequence=100
[cspc_lidar-1] full----- count=401,time=49790682,frequence=100
[cspc_lidar-1] full----- count=400,time=49791774,frequence=100
[cspc_lidar-1] full----- count=401,time=49792870,frequence=100
[cspc_lidar-1] full----- count=401,time=49793967,frequence=100
```

ros2 launch cspc_lidar lidar_rviz.py " in the terminal to open rviz2.

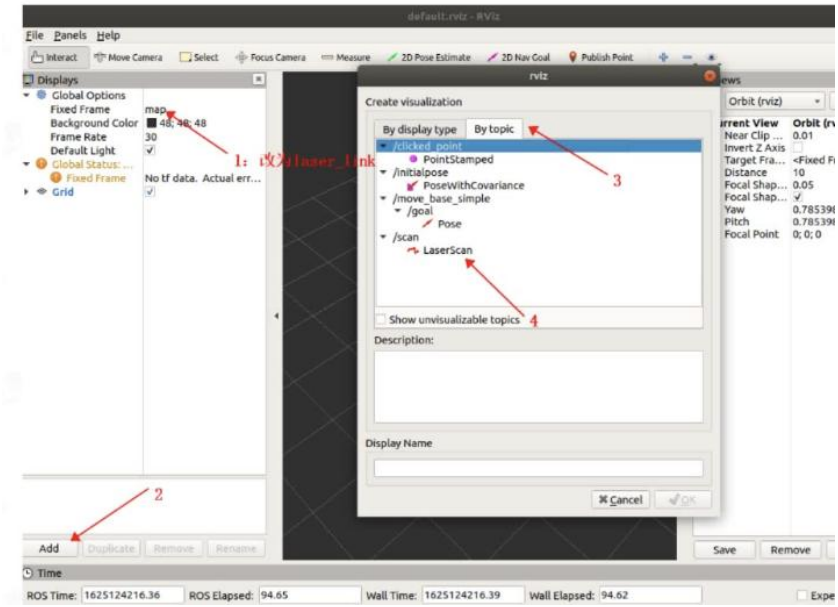
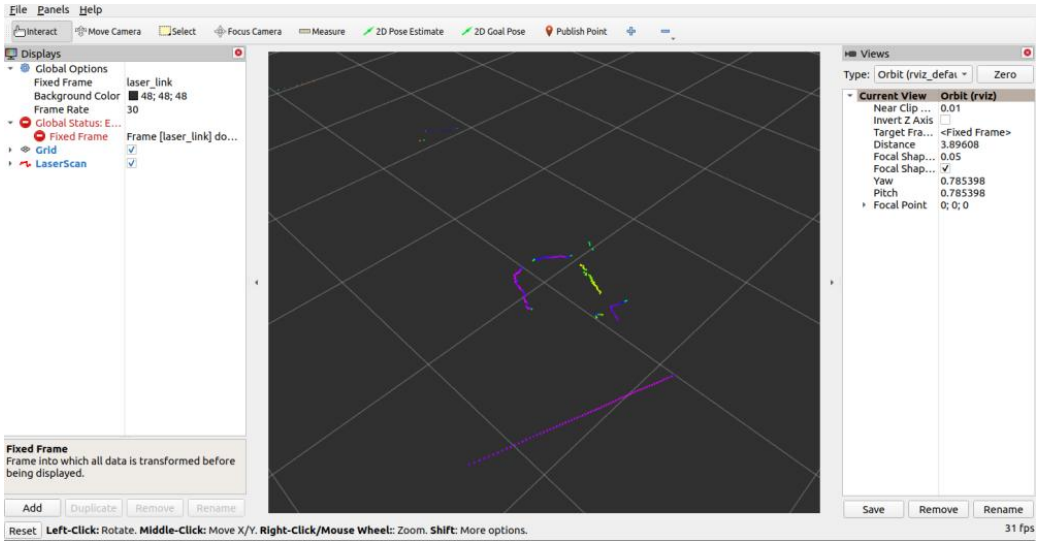
The point cloud effect can be observed.